SPECIFICATION APPLIED

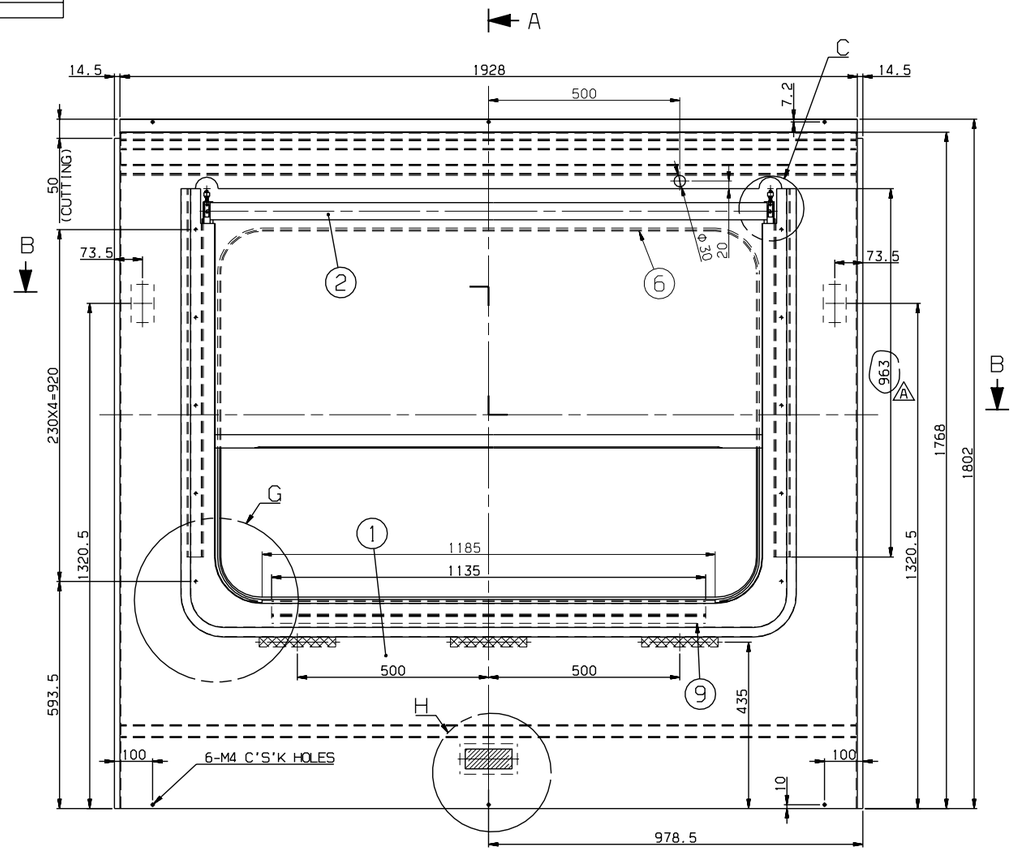

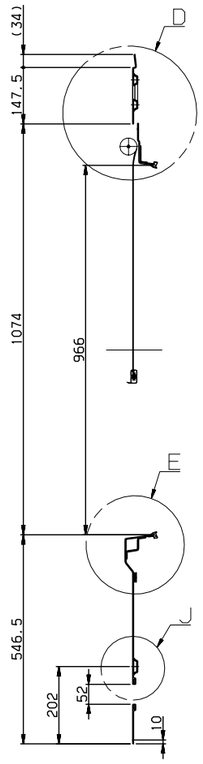

SECTION A-A

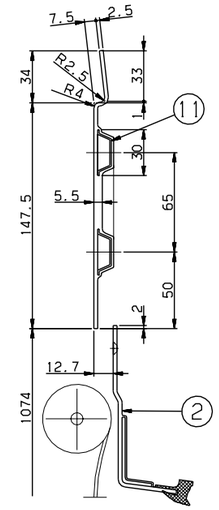

DETAIL D
SCALE=1/2

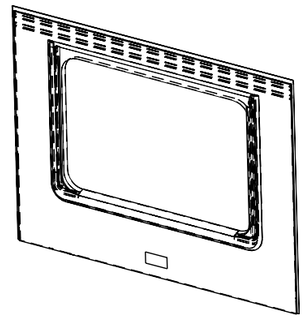

ISO VIEW

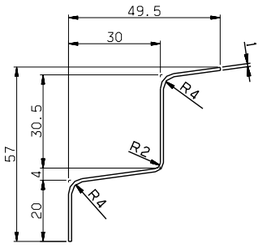

DETAIL #9
SCALE=1/1

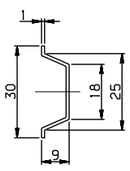

DETAIL #11
SCALE=1/1

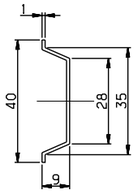

DETAIL #10
SCALE=1/1

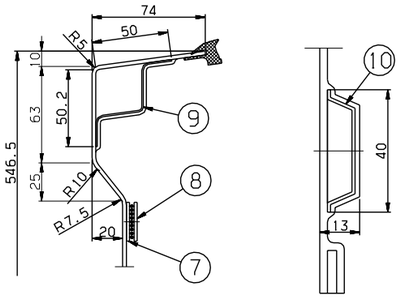

DETAIL E
SCALE=1/2

DETAIL J
SCALE=1/1

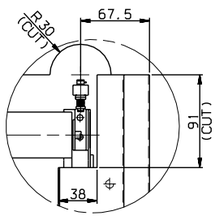

DETAIL C
SCALE=1/3

NOTE

1. AN INTERIOR PANEL'S COLOR(RAL 7047) AND SURFACE SHALL BE MANUFACTURED AFTER SAMPLE'S APPROVAL BY CUSTOMER
2. PART 6 SHALL BE CUT ADEQUATELY AND USED
3. PART 2 SHALL BE WELL OPERATED UNDER CONDITION OF ASSEMBLY
4. PART 7 SHALL BE FIXED ON THE PART 1, AND PART 8 SHALL BE DELIVERED SEPERATETLY
5. THE INTERFACE BETWEEN PART 1 AND PART 2 SHALL BE STRONGLY SEALED
6. PART 4 SHOULD BE APPLIED WITH PART 13.

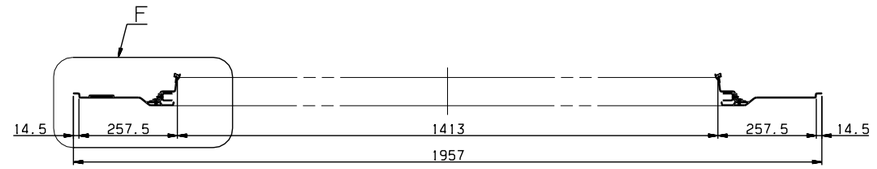

SECTION B-B

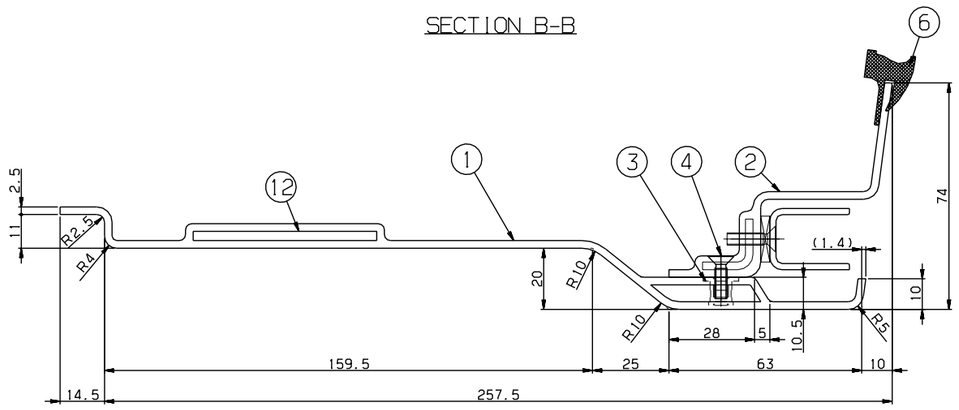

DETAIL F
SCALE=1/1

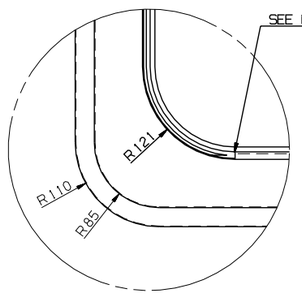

DETAIL G
SCALE=1/4

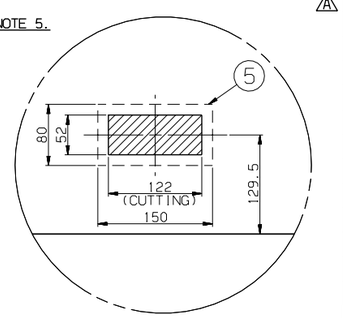

DETAIL H
SCALE=1/4

A	13	CP910004-406	ADHESIVE	ASSY	1	LOCTITE 242
	12	RFP51192EJ0-012	SEAT,TAP	SUS304	2	PL T3x60x100
	11	RFP51192EJ0-011	STIFFENER	A1050P	2	T1
	10	RFP51192EJ0-010	STIFFENER	A1050P	1	T1
	9	RFP51192EJ0-009	STIFFENER	SUS304	1	T1,L=1135
	8	RFP51192EJ0-008	DUAL_LOCK,FASTENER	ASSY	3	3M,SJ-3550 L=200(DUAL TAPE)
	7	RFP51192EJ0-007	DUAL_LOCK,FASTENER	ASSY	3	3M,SJ-3551 L=200(DUAL TAPE)
	6	RFP51192EJ0-006	RUBBER,SECTION	ASSY	1	RFP51011ANO,L=4600
	5	RFP51192EJ0-005	SEAT,TAP	SUS304	1	PL T3x150x80
	4	RS60607-098S	SCREW,F.H	SUS304	10	M4x14
	3	RFP51192EJ0-003	NUTSERT	SUS304	10	M4
	2	RFP51009AN0	PANEL,BLIND WINDOW	ASSY	1	
	1	RFP51192EJ0-001	PANEL	FRP	1	T2.5

품번 NO.	부품 번호 PART NO.	품명 DESCRIPTION	재질 MATERIAL	수량 Q'TY	중량 W.T	비고 REMARKS

승인 APP	JeongYul Lee 2014.10.16	재질 MAT'L	ASSY	명칭 TITLE	WINDOW,MASK,TYPE HH
검도 CHK	KeongBong Park 2014.10.16	중량 G.W			
설계 DGN	HeonUk Lee 2014.10.16	일반공차 MC / VO / CT	B / B / B	도면 번호 DRG. NO	MS RFP51192EJ0 Ver. 00 Rev. -A
제도 DRG	HeeSook Jeong 2014.10.16	SIZE	A1	SCALE	1/8 SHEET 1 of 1

RSD1402 RFP- 분-PRJT 참리번호

기호 MARK	일자 DATE	내용 DETAIL OF REVISION(E.C ZONE)	설변번호 E.C NO.	설계 DGN	검도 CHK	승인 APP
Ax3	2014.12.18	ADDED PART NO.#13 & DIMENSION	RSD1402-U071	H.U.LEE	K.B.PARK	J.Y.LEE

참고번호 REF. NO.

HYUNDAI Rotem 현대로템주식회사

본 도면은 당사 재산으로서 당사의 허락없이 복제나 배포 금지됨. PROPERTY OF ISSUING ENTITY. CANNOT BE DISTRIBUTED OR REPRODUCED WITHOUT AUTHORIZATION.

CATIA

일반공차 GENERAL TOLERANCE			
절삭가공 MACHINING			
기호 MARK	A	B	C
기본 치수 (±)			
~ 6	0.05	0.1	0.2
6 ~ 30	0.1	0.2	0.5
30 ~ 120	0.15	0.3	0.8
120 ~ 315	0.2	0.5	1.2
315 ~ 1M	0.3	0.8	2.0
1M ~ 2M	0.5	1.2	3.0
2M ~ 4M	0.8	2.0	4.0
4M ~ 8M	-	3.0	5.0
8M ~ 12M	-	4.0	6.0
12M ~ 15M	-	5.0	7.0
15M ~ 20M	-	6.0	8.0
주조, 주강품 CASTING (±)			
기호 MARK	A	B	
~ 10	1	1.5	
~ 30	2	3	
~ 40	2	4	
~ 100	1	1.5	
~ 200	1.5	2	
~ 400	2	3	
~ 800	3	4	
~ 1600	4	5	
~ 3150	-	7	
절삭가공 CUTTING			
< 3	0.5	1	
~ 6	1	1.5	
~ 10	1	1.5	
~ 30	2	3	
~ 1M	2	3	6
~ 2M	3	4	8
~ 4M	4	6	11
~ 8M	5	8	14
~ 12M	6	10	18
~ 15M	7	12	21
~ 20M	8	14	24
주조, 주강품 CASTING (±)			
기호 MARK	A	B	C
~ 1	1	1	
~ 3	1	2	3
~ 6	1	2	4
~ 10	1	2	5
~ 30	1	3	7
~ 120	2	4	8
~ 315	2	5	10
~ 1M	3	6	12
~ 2M	4	8	16
~ 4M	5	10	20
몰딩 MOLDING (±)			
기호 MARK	A	B	C
~ 120	0.2	0.5	1.2
~ 315	0.3	0.8	2.0
~ 1M	0.5	1.2	3.0
~ 2M	0.8	2.0	4.0
~ 4M	-	3.0	5.0
~ 8M	-	4.0	6.0
~ 12M	-	5.0	7.0
~ 15M	-	6.0	8.0